Ul. Radnička 1, 17500 VRANJE, SRBIJA Tel.+381 421 121

Ecological burning stove that heats your home

ALFA 90 PELLET

This product meets the requirements of the Ecodesign Directive in terms of efficiency and air pollution level, in order to contribute to the reduction of energy consumption and negative environmental impact.

USER MANUAL

ENG_V.2.0

1612249

ALFA PLAM

Heating appliances (hereinafter referred to as "stove") of ALFA PLAM are constructed and their technical acceptance test was performed on the basis of safety regulations stated in the referent European Union directives.

This manual is intended for owners, installers, workers and staff responsible for stoves maintenance.

In case of any doubt, and for all clarifications, please contact the manufacturer or authorized service, and specify the number of the disputed paragraph.

Printing, translation and reproduction, even partial, of this Manual must be authorized by ALFA PLAM Company.

Technical information, graphics and specifications in this Manual may not be published.

DOUBLE COMBUSTION SYSTEM

Flame produced by wood that is properly burning in a stove emits the same amount of carbon dioxide (CO2) that is released due to the natural decomposition of the wood itself.

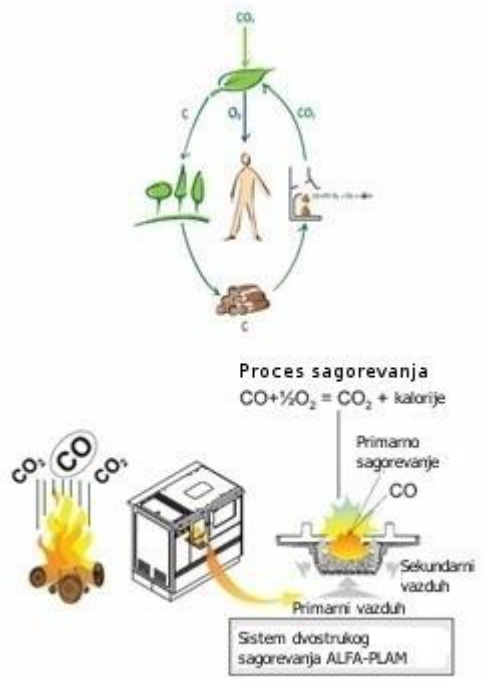

The amount of CO2 produced as a result of combustion or decomposition of a plant, is equal to the amount of CO2 that the plant itself can take from the air and convert into oxygen, which is released into the air and into the carbon it consumes during its life cycle.

Using non-renewable fossil fuels (coal, oil, gas), unlike to what happens with the wood, releases into the air large amounts of CO2, accumulated over millions of years, increasing the greenhouse effect. However, the use of wood as fuel is in perfect balance with nature since it uses renewable fuels, which is in conformity with the environmental cycles of nature.

The principle of clean combustion is fully compliant with the objectives and the firm ALFA PLAM took care about it when designing its products.

What do we mean by clean combustion and how do we achieve this? Control and regulation of primary air and secondary air insertion leads to the second combustion, that is to post combustion characterized by a second, stronger and lighter flame that develops above the main one.

That flame, thanks to the introduction of a new oxygen combusts gases significantly by improving performance and reducing heat to a minimum emission of harmful CO (carbon monoxide) generated due to incomplete combustion. This is an exclusive feature of the stoves and other products of the company ALFA PLAM.

Dear Customer,

First of all, we wish to thank you for the trust you have placed in us by purchasing our product and we congratulate you on your choice.

To make sure that you use your new stove in the best way, we advise you to read this manual carefully.

⚠ CAUTION

- The chimney, to which the range is connected must meet the requirements provided in the user manual.
- When connecting the appliance to the chimney, never use flexible hoses instead of flue pipes.
- Regular maintenance and care, such as cleaning the range, the flue pipes and the nozzles (of the pipes), are important to ensure safety, and especially for the sake of economy and in order to maintain the value of the range.
- Unauthorized modification of the device is prohibited and therefore any unauthorized modification shall render the warranty null and void.

Contents:

1. INTRODUCTION 1
1.1. SYMBOLS 1
1.2. PURPOSE 1
1.3. PURPOSE AND CONTENT OF USER MANUAL 1
1.4. STORING MANUAL STORING AND CONSULTATION 1
1.5. UPDATING USER MANUAL 1
1.6. GENERAL INFORMATION 1
1.7. REQUIRED CAPABILITIES OF THE USER 2
1.8. TECHNICAL ASSISTANCE 2
1.9. SPARE PARTS 2
1.10. NAMEPLATE 2
1.11. DELIVERY OF THE STOVE 2
2. Safety warnings 2
2.1. WARNINGS FOR INSATLLER 2
2.2. WARNINGS FOR USER 2
2.3. WARNINGS FOR MAINTAINANCE WORKER 3
3. CHARACTERISTICS OF FUEL AND STOVE DESCRIPTION 3
3.1. FUEL CHARACTERISTICS 3
3.2. PELLET STORAGE 4
3.3. DESCRIBTION OF MAIN PARTS OF THE STOVE 4
4. DELIVERY AND TRANSPORT 6
5. PREPARING THE SPACE FOR INSTALLATION 6
5.1. PRECAUTION MEASURES 6
5.2. GENERAL MEASURES 6
5.3. PLACE OF INSTALLING THE STOVE 6
5.4. AIR USED FOR COMBUSTION 7
5.5. SMOKE EXPULSION 8
5.5.1. Smoke discharge 8
6. INSTALLATION 9
6.1. CONNECTING THE APPLIANCE 9
6.1.1. Connection to electricity 9
7. START-UP OF STOVE 9
7.1. Loading pellet 9
7.2. Stove start-up 10
8. DESCRIPTION AND FUNCTIONING OF THE ELECTRONIC CARD 10
8.1. DESCRIPTION OF THE ELECTRONIC CARD (KEYBOARD) (figure 1) 10
8.2. FUNCTIONING OF THE ELECTRONIC CARD 11
8.3. PARAMETERS USED BY THE STOVE USER 12
8.4. ALARM MANAGEMENT 13
8.4.1. Alarm dEP no (pressure alarm – alarm of the pressure switch) 14
8.4.2. Alarm ALAr Sond (alarm of the flue gases probe) 14
8.4.3. Alarm ALAr hot (alarm for excessive smoke temperature) 14
8.4.4. Alarm of the chamber: 14
8.4.5. Alarm (safety thermal) for overheating of the chamber or temperature of the auger 14
8.4.6. Alarm for failed ignition 15
8.4.7. Alarm for power outage 15
8.4.8. Alarm ALAr Fan (alarm for exhaust gases fan) 15
8.4.9. „StoP FirE“ (it is not an alarm) 15
8.5. Electrical connection scheme 16
9. MAINTENANCE AND CLEANING 16
9.1. SAFETY MEASURES 16
9.2. REGULAR MAINTENANCE BY THE USER 17
9.2.1. Interior cleaning of furnace 17
9.2.2. Cleaning ashtray 18
9.2.3. Glass cleaning 19
9.2.4. Chimney cleaning 19
10. INFORMATION ON THE DESTRUCTION AND TRANSPORT TO LANDFILL 19
11. TECHNICAL SPECIFICATIONS 20
12. DIMENSIONS 21

1. INTRODUCTION

Do not do anything if you have not understood all the information outlined in the manual; in case of any doubt, seek assistance from specialized staff of ALFA PLAM company.

ALFA PLAM reserves the right to change at any time the specifications and technical and / or functional characteristics of the stove, without prior notice.

1.1. SYMBOLS

In this manual, very important items are highlighted with the following symbols:

DANGER: This symbol expresses a significant remark about the behavior in order to prevent accidents or damage to materials

☞ **INSTRUCTION**: Instruction regarding the proper use of the stoves and the responsibility of the authorized persons

! **ATTENTION:** An item that is of great importance.

! **DANGER:** This symbol expresses a significant remark about the behavior in order to prevent accidents or damage to materials.

1.2. PURPOSE

! The ALFA PLAM unit is a new stove for heating, with its advanced technology, which only uses pellets and thanks to automatic operation creates a healthy and safe heat in space.

The Stove shall work exclusively with a sealed combustion chamber door.

Do not open the door when the stove is operating.

The stove is characterized by a double combustion system: PRIMARY and SECONDARY with positive effects in terms of performance and in terms of discharge of the "cleaner smoke."

The above purpose and the designed configuration of the stoves are the only ones allowed. Manufacturer: **never use the stove in non compliance with the submitted guidelines.**

! The above stated purpose is valid only for the devices with the complete structural, mechanical and installation efficiency. ALFA PLAM stove is a device for indoor space only.

1.3. PURPOSE AND CONTENT OF USER MANUAL

Purpose

Purpose of this manual is to enable user to react properly and to use all available means necessary for appropriate usage, handling and maintenance of the stove.

Content

This user manual contains all necessary information about installation, handling and maintenance of stove.

By following all procedures from user manual you will be guaranteed high level of safety and performance of stove.

1.4. STORING MANUAL

STORING AND CONSULTATION

The manual must be carefully stored and must always be available for consultation, both from the users, as well as by the staff responsible for installation and maintenance.

Manual - *Instructions for use and maintenance* is an integral part of the stove.

DESTRUCTION OR LOSING

If necessary, ask the company ALFA PLAM for another copy.

ASSIGNMENT OF THE STOVES

In case of an assignment of the stove, the user is required to submit a new customer with this manual.

1.5. UPDATING USER MANUAL

This user manual is in accordance with the level of technical knowledge at the moment of stove's launching in the market.

If there is some change, harmonization or implementation of new technology in new stoves then Alfa Plam will not consider as inappropriate or inadequate stoves which are already present in the market with appropriate technical documentation.

1.6. GENERAL INFORMATION

INFORMATION

In case of exchange of information with the manufacturer of the stoves, it is necessary to specify the serial number and identification data listed on the page "GENERAL INFORMATION" at the end of this manual.

RESPONSIBILITY

By submitting this manual, ALFA PLAM company is exempted from any responsibility, both civil and criminal, in case accidents caused by partial or total disregard of specifications listed therein.

☞ In addition, ALFA PLAM company is exempted from any repsonsibility in case of nondesignated or improper use of stove by the user; in case of unauthorized modifications and / or repairs, in case of use of non-original spare parts or those that are not designed for this model of the stove.

EMERGENCY MAINTENANCE

Extraordinary maintenance must be performed by qualified personnel trained to intervene on the model stoves referred to in this manual.

☞ ACCOUNATBILY FOR ACTIONS DURING INSTALLATION

Responsibility for actions taken when installing the stove cannot be assignesd to ALFA PLAM, company but responsibility goes, and remains, with an installer, who is required to conduct checks as for the chimney and bringing of air, as for properly

proposed installation solutions. In addition to that, all safety regulations and applicable special legislation of the state in which the stove is being installed have to be complied with.

USE

Except for the regulations listed in this manual, using the stove is to be in line with all applicable safety regulations provided for by special legislation of the state in which the stove is installed.

1.7. REQUIRED CAPABILITIES OF THE USER

User of the stove is an adult, a responsible person with the technical knowledge necessary for routine maintaining of mechanical and electrical parts of the stove.

Make sure that children do not approach the stove that is turned on, in order to play.

1.8. TECHNICAL ASSISTANCE

ALFA PLAM company is able to solve any technical problem related to usage and maintenance of the stove, throughout its lifetime.

Central office is at your disposal so as to refer you to your nearest qualified service facility.

1.9. SPARE PARTS

Use only original spare parts.

Do not wait for the parts to wear out from use before replacing them.

Replacement of the seedily parts before the breaking leads to prevention of accidents that occur because of sudden breakage of parts, which can harm people and cause damage to property.

☞ Carry out periodical inspections on maintenance as specified in the "MAINTENANCE AND CLEANING“chapter

1.10. NAMEPLATE

The main nameplate affixed to the stove contains all the characteristics of the product, including information on the manufacturer, identification number and CE mark.

1.11. DELIVERY OF THE STOVE

The stove is delivered in perfect packaging in a cardboard box. Attached to the wooden base which enables its movement with the help of forklifts and/or other means.

Inside the stove there is following material:

- Manual for usage, installation and maintenance;
- Spatula for cleaning the stove (channel through which the smoke flows).

2. Safety warnings

2.1. WARNINGS FOR INSATLLER

- **!** Make sure the specifications for the reception of the stove are in accordance with the local, national and European regulations.
- Adhere to the guidelines from this manual.
- Make sure the specifications of the of chimney and equipment for taking air are in accordance with the required type of installation
- Do not carry out bare electrical connections with temporary and non-insulated cables
- Check whehether the grounding of electrical devices is efficient.
- Always use the means for personal protection and other protective equipment as provided by law

2.2. WARNINGS FOR USER

! - Prepare the space needed to install the stove in accordance with the local, national and European regulations.

- Because it is a heating device, the stove has very hot outer surfaces.

It is therefore recommended to use extreme caution during work, and in particular:

- Do not touch and or approach the glass door which may cause burns;
- Do not touch the pipe through which the smoke flows;
- Do not perform any cleaning;
- Do not open the door with glass;
- Make sure that the children do not approach the stove;

- - Adhere to the guidelines contained in this manual.
- Keep to the guidelines and warnings from the plates affixed to the stove.
- On the plates, there are guidelines for preventing accidents at work, so they must always be fully readable. If they are damaged or become illegible, they must be replaced, requests the Manufacturer to provide an original replacement.
- Use only the fuel in line with the guidelines from the chapter relating to the the fuel characteristics.
- Strictly adhere to the plan for regular and emergency maintenance.
- Do not use the stove without daily control performed as specified in the "Maintenance" chapter of this manual.
- Do not use the stove in case of malfunction, in case of doubt that something is broken or in case of unusual sounds

- Do not throw water on the stove in operation, or for the purpose of extinguishing the flame in ember tray.
- Do not extinguish stove by disconnecting the plug from the socket.
- Do not lean over an open stove, it can endanger its stability.
- Do not use the stove as support or for of any kind of anchoring
- Do not clean the stove before completing cooling down of its structure and ashes.
- Touch the door only when the stove is cold
- Conduct all the operations calmly and in the conditions of maximum safety.
- In the case of fire in the chimney, turn off the stove in the manner described for extinguishing described in the chapter 7.

ATTENTION: In order to avoid any danger caused by accidental plug in thermal switch, this stove should not be supplied through a device with exterior control, such as timer, but it should be connected to the circuit that is regularly supplied and disconnected from the network.

. - In case of the poor operation of the stove caused by a week draft of the chimney, the same should be cleaned by applying the procedure described in 8.2.5.

In any case, the cleaning of the chimneys should be conducted at least twice a year, in accordance with the guidelines from the article 8.2.5.

- Do not touch the painted parts during the stove operation of, so that the damaging of the colour can be avoided.
- Replacement of the fuse is done by qualified personnel.

2.3. WARNINGS FOR MAINTAINANCE WORKER

! - Abide to the guidelines from this manual.
- Always use means for personal protection and other protective devices.
- Before beginning with any sort of maintenance, make sure that the stove, in case it has already been used, has cooled down.
- In case that any safety device is not working, it is considered that the stove is not working.
- Pull out the plug in from the socket on the wall before work on electrical, electronic parts and connectors.

3. CHARACTERISTICS OF FUEL AND STOVE DESCRIPTION

3.1. FUEL CHARACTERISTICS

- Pellets or wooden rollers (Figure 3.1) is a mixture of different kinds of wood compressed by mechanical procedures observing environment protection regulations

It is the only kind of fuel prescribed for this kind of stove.

- Efficiency and thermal power of the stove can vary in accordance with the kind and quality of the used wooden rollers.

In order for the stove to work correctly, it demands rollers with the following characteristics:

- dimensions Ø 6 – 7 mm
- maximum length 30 mm
- maximum content of the humidity 8% do 9%
- The stove is equipped with the storage for wooden rollers with the capacity depicted in the above stated column of characteristic data.

The door for loading are placed on the upper side.

☞ - **The cover can always be opened so that loading with the wood rollers can be conducted.**

! For resetting of the control at the working temperature it is not possible to use the classical fuel.

! It is forbidden to use the stove for incineration.

Fig.3.1

Correct grade of pellets

Meets EN Plus Grade A1.
Correct diameter and length with no dust and minimum bark content.

Poor quality pellets

Pellets not pressed correctly causing them to easily disintegrate.DO NOT USE!
The auger will be unable to consistently deliver these pellets from thehopper to the burner, resulting in pellet lighting problems.

Pellets too dark in colour

Too much bark content.DO NOT USE!
These will cause excessive sand in the ash resulting in clinker blocking air holes, poor combustion and jamming of the brazier cleaning system.

Pellets too short in length

DO NOT USE!
The auger will not be able deliver these pellets at the correct rate to the burner, affecting the input (and output) of the boiler and the combustion.

Pellets with high dust content

DO NOT USE!
The auger will not be able deliver these pellets from the hopper to theburner, resulting in pellet lighting problems.

3.2. PELLET STORAGE

! Pellets should be kept in a dry, not too cold space.

It is recommended that a couple of sacks with pellets should be kept in a room in which the stove is used or in a adjacent room because of the acceptable temperature and air humidity.

Moist or/and cold pellets (5°C) reduce the thermal power of fuel and require more detailed cleaning of the ember tray (of non-burned material) and combustion chamber.

! Special attention should be paid to storage and moving of the sacks with pellets. One should avoid its breaking and making of splinters.

If splinters are put in the storage of the stove, it could cause blockage of the system of pellet loading.

3.3. DESCRIBTION OF MAIN PARTS OF THE STOVE

A) **Pellet storage**
B) **Door with a handle**
C) **Combustion chamber**
D) **Ashtray drawer**

E) **Control panel**
F) **Ember tray**
G) **Fan for heating up the space**

It is placed in the lower part of the stove. It is automatically moved when the body of the stove is heated and is automatically extinguished when it is cooled down.

H) **Smoke expulsion fan**

It enables aggressive smoke expulsion and simultaneous intake of the air which is combusted in the ember tray. It works parallel with the system for loading and exchanges the power for smoke discharge in dependence of the thermal power.

I) **Thermostat for manual pellet loading**
L) **Pressure switch (pressostat)**
M) **Thermostat for manual boiler loading**
N) **Loading System**

It consists of the regulator and dispenser and enables pellet to fall in the ember tray.

O) **Electronic small board**
P) **Stove ignition switch**
Q) **Electronic lighter**

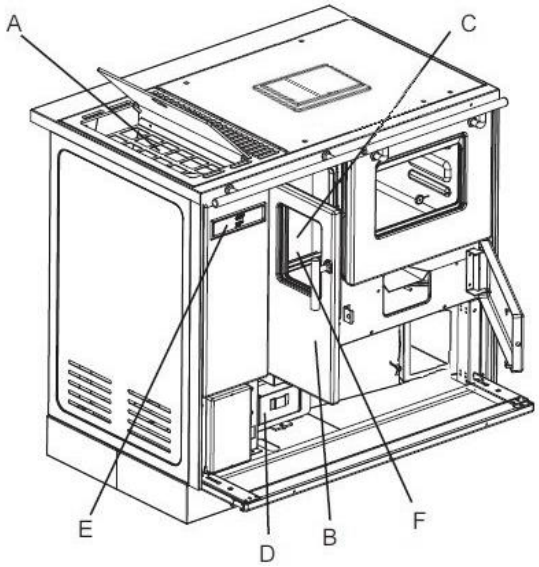

Fig. 3.3.1

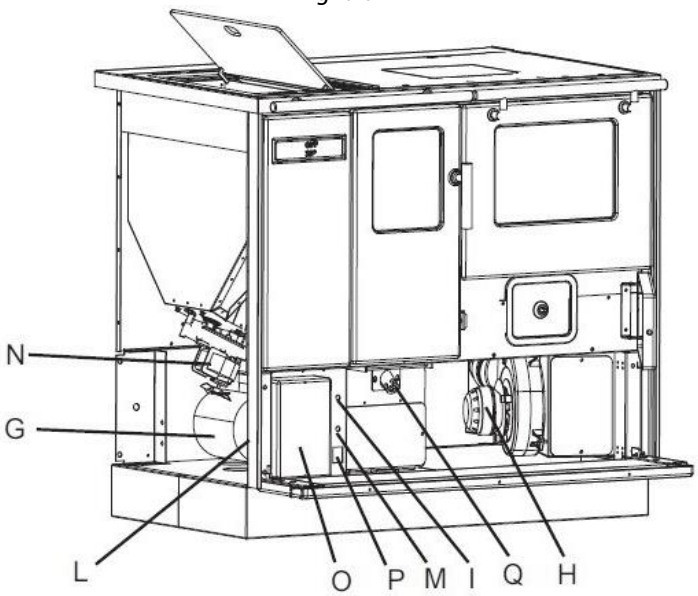

Fig.3.3.2

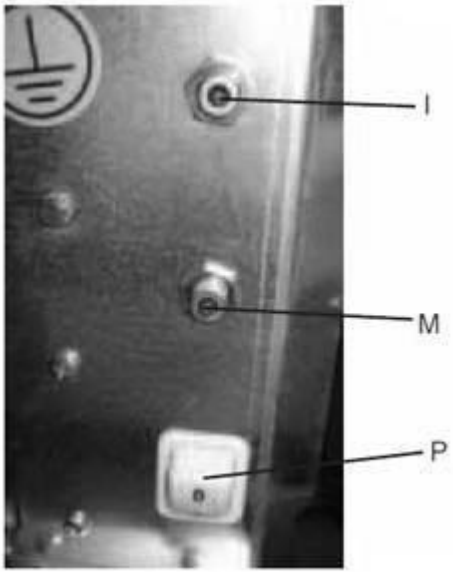

Fig. 3.3.3

4. DELIVERY AND TRANSPORT

The stove is delivered with all the associated parts.

Be careful – the stove has a tendency to turnover.

! **Centre of gravity of the stove is moved to the left.**

Take care of the above stated even in case of the moving of the stove.

During lifting avoid difficult moves.

Make sure that the fork lift truck has a bigger carrying capacity than the weight of the stove it should lift.

The operator of the fork lift truck shall be the only person responsible for the lifting of the weight.

! **Make sure the children do not play with parts of the packaging material (e.g: cellophane and polystirol) Danger of suffocation!**

5. PREPARING THE SPACE FOR INSTALLATION

5.1. PRECAUTION MEASURES

! **It is the user who shall bear and keep the responsibility for the operations conducted in the space in which the stove shall be installed and he/she is entrusted to carry out the checks in regard to the proposed installation**

The user is to comply with all the local, national and European safety regulations.

Stove must be installed on the floor of the appropriate capacity.

Instructions for assembly and disassembly of the stove are only intended for specialized technicians.

Advice to users is to always address our technical assistance with the request for qualified technicians.

In case of recruitment of other technicians, it is recommended that you check their actual abilities.

Before beginning with the phase of assembling or disassembling of the stove, the installer, has to apply security measures provided by law, in particular he is :

A) not to operate in the conditions hampering him in his work;

B) to work in perfect mental and physical conditions and make sure that the means for the personal protection are complete and in good condition;

C) to wear protective gloves;

D) to wear protective shoes ;

E) to use tools with insulation against electric shock;

F) to make sure that the space in which assembly or disassembly is performed is freed from obstacles.

5.2. GENERAL MEASURES

There are many factors that influence the effectiveness of fire - in terms of thermal performance and low emission of pollutants (CO - carbon monoxide).

Some factors depend on the stove, but some depend on the characteristics of the space, installing and the extent of regular maintenance of products.

Some of the important factors are:

- air that is used for combustion;
- Characteristics of the drainage system for the products of combustion;
- The quality of pellets (moisture content and dimensions).

<u>The following paragraphs lay down certain guidelines that should be followed in order to achieve the best performance of the purchased products.</u>

5.3. PLACE OF INSTALLING THE STOVE

Picture (Fig. 5.3.1) shows a minimum distance that must be allowed for when setting up the stove in the regard of the materials and flammable objects.

A) Adjoining wall
B) The wall behind the stove
C) The side wall
D) Protection of the floor

Protect from the flame heat radiation all the things that could ignite if exposed to excessive heat.

Wood floors or those made of combustible materials must be protected with non-combustible material, such as sheet metal of 2-3 mm thickness

Protection must cover the entire floor area in front of the stove.

The stove can be installed between two walls..

Minimum space that should be allowed between the stove and the wall surfaces should be 2 cm.

Any wooden beam placed over the stove must be protected by refractory material.

! If the above stated conditions are not fulfilled, the stove cannot be installed.

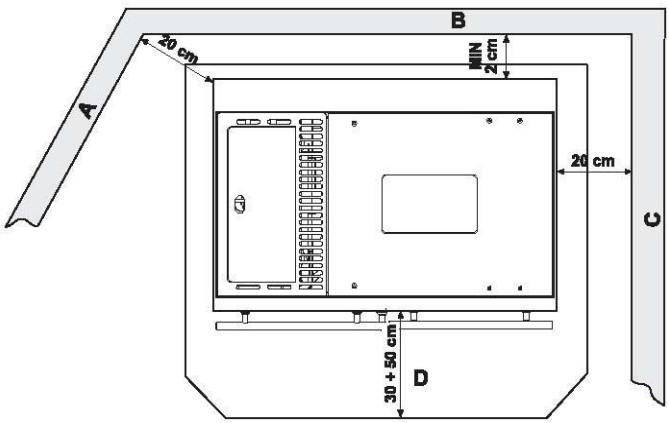

Fig.5.3.1

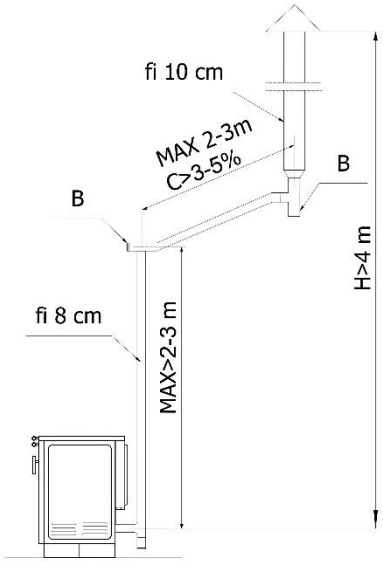

Fig.5.4.1

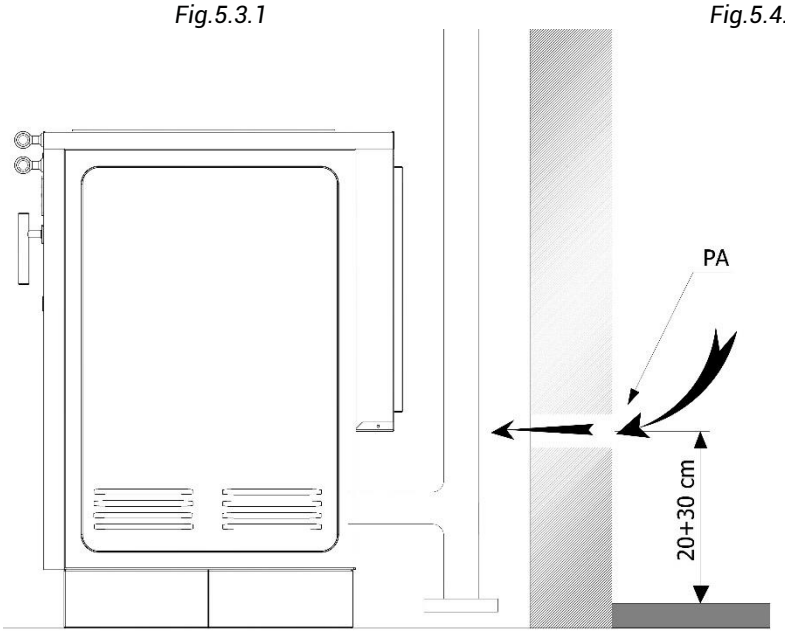

A – Chimney cap
B – Checking
C – Acclivity
H – Height

Fig.5.4.2

5.4. AIR USED FOR COMBUSTION

! The stove, during its operation takes the air from the room in which it is located through the hole located on the rear right side of the stove.

The place for taking air from outside can be linked with a hole in the wall by means of the pipe with a gasket, whose diameter is 80 mm.

! **The maximum length of the air intake pipe is 4.5 m with a maximum of 3 cranks with an angle of 90 °.**.

Air inlets should be placed at a height of 20-30 from the soil.

From the outside, a grid must be placed for permanent ventilation, in very windy areas exposed to rain and wind, protection must be provided from rain and wind.

If it is impossible to provide the room with outdoor air, it is possible to make an external opening in the adjoining room, but constant communication with the transit grid must be provided. The stove configured in this way is no longer hermetically sealed in regard to the room in which it is installed (Fig. 5.4.2 - C = Crate, G = grid, S = shade).

! It is forbidden to take the air out of the garage, storage with flammable materials or areas where there is a risk of fire.

! If there are several other heaters in the area and the stove is not hermetically sealed in the space where it is installed, the access to the air supply must be guaranteed for the amount of air necessary for the operation of all appliances.

! If in the area where the stove is set, one or more fans for air expulsion (aspirator) is working , it is necessary to check that there are is no poor performance of the stove caused by the insufficiency of air needed for combustion

5.5. SMOKE EXPULSION

! The stove works with combustion chamber in depression and therefore it is absolutely necessary to check if the smoke discharge channel is hermetically closed.

- After choosing the appropriate place for installing and after having in mind the above stated measures in paragraph 5.3, the place for the smoke discharge pipes should be determined.
- The pipes which should be used must be stiff, made of aluminium tin (at least 1,5 mm thick) or made of stainless steel (at least 0,5 mm thick) with nominal diameter of 8 cm and with the gaskets (up to 5 meters long) or up to 10 cm with gaskets (over 5 meters long) (Figure 5.5.1)

It is advised that the pipes should be isolated with isolation material (glass wool of minimal thickness of 2 cm) or steel pipes with double layer should be used, whereas, possibly, the vertical part, if internal, does not have to be double-layered.

! -It is mandatory that the first vertical part should be at least 1,5 meter long so as to guarantee regular smoke discharge.

It is desirable to make up to 5 to 6 changes of directions of the crank up to 45-90º or T joints.

- Always use T joints with access eyes at each horizontal and vertical change pipe direction.
- Horizontal parts must not be longer than 2-3 m with acclivity of 3-5%.
- Anchor the pipes to the walls.

! Pipe joint MUST NOT BE CONNECTED

- **On the chimney used by other smoke generators (stoves, fire-places, etc.)**
- **On the system for air extraction (aspirators, valves, etc.) even if connected to tubes.**

! It is forbidden to install the valves to turn off the draft.

! For the pipe length of over 5 meters or in low draft conditions (the presence of many curves, inadequate endings of discharge channel, etc.) it could happen that the smoke discharge is not appropriate.

In that case it will be necessary to modify the parameters of work (discharge of smoke and pellet loading) so as to comply with the real characteristics of the chimney.

Contact technical support.

5.5.1. Smoke discharge

Chimney for smoke discharge must be made with respect to the regulations in terms of dimensions, and in terms of materials used for its production.

COLLAPSED chimneys, made of unsuitable material (fiber cement, galvanized steel, etc. whose interior is smooth and porous) are illegal and call into question good functioning of the stove.

Smoke discharge through a traditional chimney (Figure 5.5.1) can be done only if the following rules are observed:

- Inspect the state of the chimney; in case of the old chimney, it is advisable to carry out its sanitation by importing of steel pipes insulated in the proper manner (steel wool, vermiculite).
- Smoke can be extracted directly into the chimney which is equipped with the access eye.

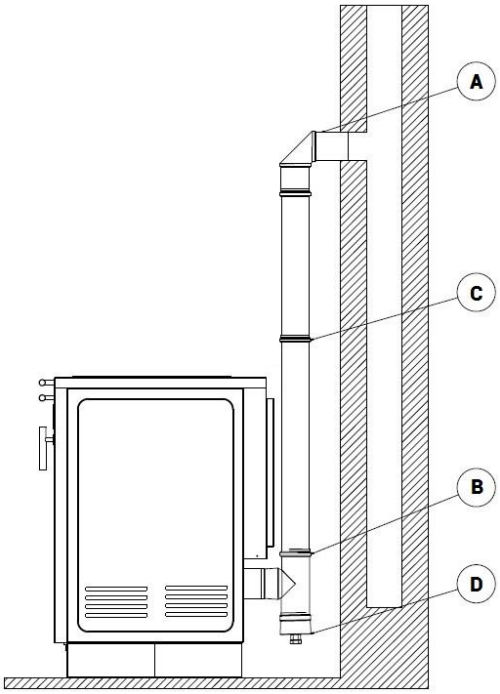

Fig.5.5.4

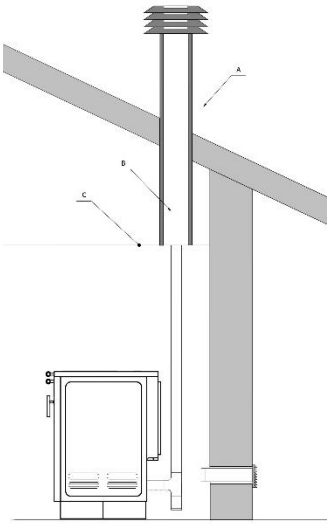

Fig.5.5.5

A) Wind damper
B) Chimney
C) Hermetic sealing
D) Access eye

! - In the case of a larger diameter chimney, it is necessary to "insert" in the same a steel pipe (with a diameter that corresponds to the chimney) and is isolated in an appropriate manner (Figure 5.5.1-2).

- Make sure the connection to the chimney in the wall is well sealed.
- Avoid contact with combustible material (wooden beams) and in any case take care of their insulating with refractory material.

A) Vermiculite and/ or glass wool.
B) Steel pipe.
C) Cover panel.

6. INSTALLATION

Installation must be performed by qualified personnel with respect to regulations.

6.1. CONNECTING THE APPLIANCE

6.1.1. Connection to electricity

Just plug the stove using the supplied plug.

☞ Connecting to electricity (plug) must be easily accessible even after stove installment.

! If the supply cord is damaged, it must be replaced by technical assistance staff or by qualified technicians in order to avoid any risk.

6.1.1.1 Grounding

! It is mandatory to perform grounding and set up the differential switch in line with the applicable laws (Figure 6.1.1).

7. START-UP OF STOVE

7.1. Loading pellet

The first operation that needs to be done in order to light the stove is to fill the repository with fuel (pellet).

! Pellets to be poured into the repository with the blades (Figure 7.1.1). Do not empty the bag directly into the repository.

Fig.7.1.1

7.2. Stove start-up

To put the stove into operation put the switch to ''I'' (ignition) (Figure 7.2.1.)

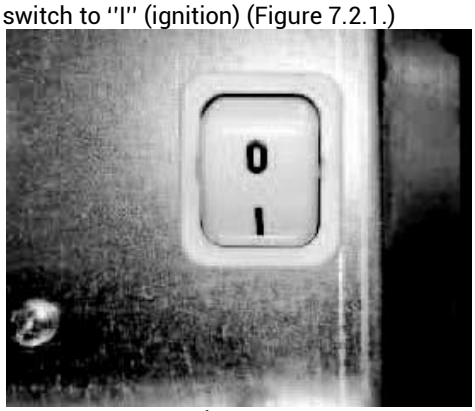

Fig.7.2.1.

8. DESCRIPTION AND FUNCTIONING OF THE ELECTRONIC CARD

8.1. DESCRIPTION OF THE ELECTRONIC CARD (KEYBOARD) (figure 1)

Button 1: it increases the room temperature, shows the temperature of the chamber
Button 2: reduces the room temperature
Both these buttons have program functions.
Button 3: modification of the temperature and program functions
Button 4: switched on/ switched of (ON / OFF) and exit from programs
Button 5: reduces the heat capacity from 5 to 1
Button 6: increases the heat capacity from 1 to 5

WARNING

Automatic programing of the ventilation with values from 1 to 5 has been factory adjusted and can be changed only by authorized professional repairmen, and factory experts. They are informed from each separate case.

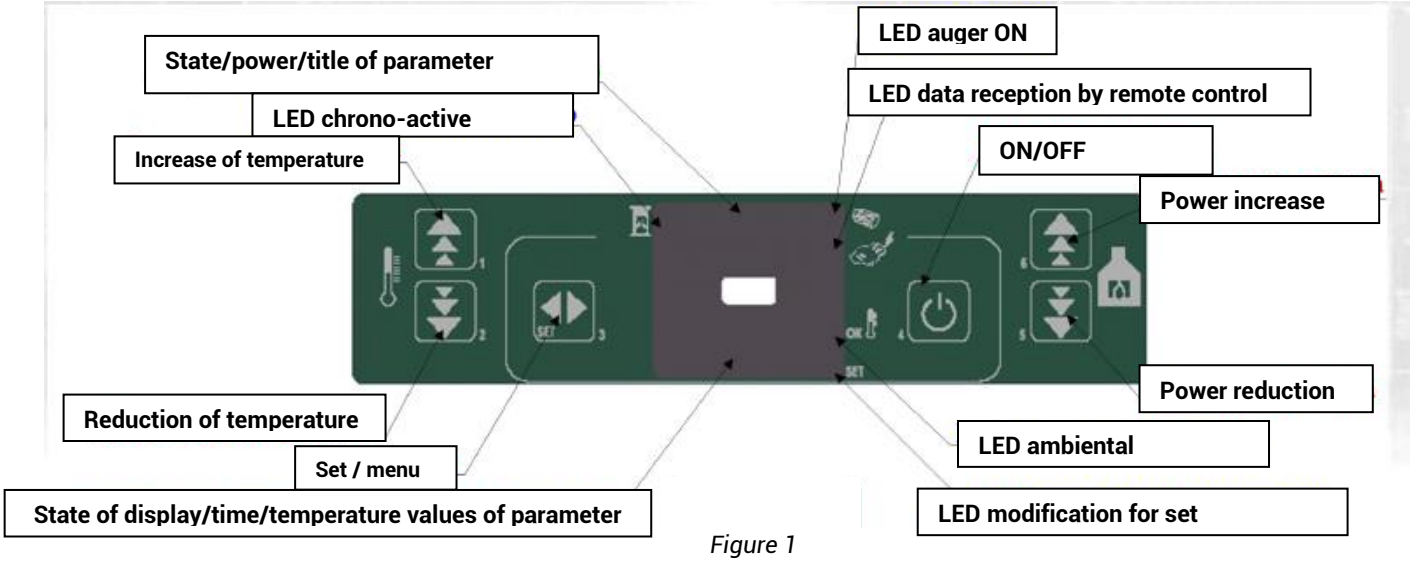

Figure 1

Electronic keyboard of controls
LED → Light Emitting Diode → Lamp

8.2. FUNCTIONING OF THE ELECTRONIC CARD

When it is already connected to the power supply, you should turn the switch which is located at the front side of the stove (fig.7.2.1.) into position 1. Then the following indication as shown in figure 2 appears:

Figure 2.

In order to start the stove, press button 4. Shortly after this, the command to the electronics will put the stove into a state of calibration, that is, preparation for work and the message shown in figure 3 appears on the display. The suction device will be switched off for about 15 seconds, that it will be switch on again for maximum 7 seconds.

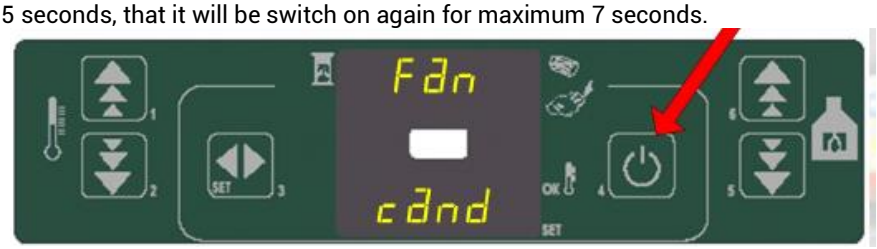

Figure 3.

Upon termination of this stage, which lasts about 20 seconds, the message "LOAD WOOD" appears as shown in figure 4. The auger loads the pellets and the ignition heating element is on. This is shown on the display of the control keyboard through the previously described LED lamps.

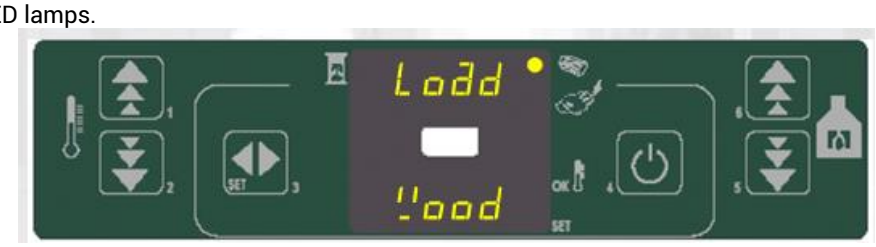

Figure 4.

When the temperature is sufficiently high (after about 15 minutes), reach in accordance with a certain coefficient (about 3ºC per minute), the electronic command prepares the fuel ignition and the next stage of operation follows, flame stabilization and then the display of the command board shows the message "FIRE ON" (activated flame) as in figure 5. The tangential fan (alternator) switches on at that moment as well.

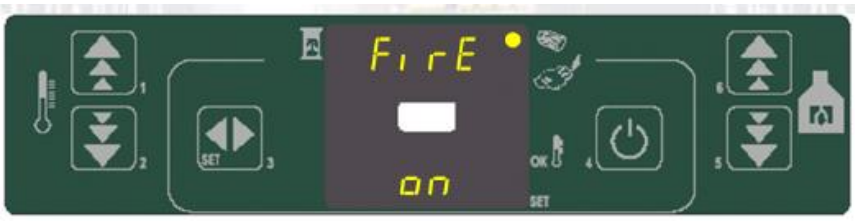

Figure 5.

Upon termination of the stabilization stage (the standard duration is about 2 seconds), the control of the electronic unit goes to an operation mode, sowing the selected heating power (which may be changes by means of the buttons 5 and 6) and the ambient temperature Figure 6.

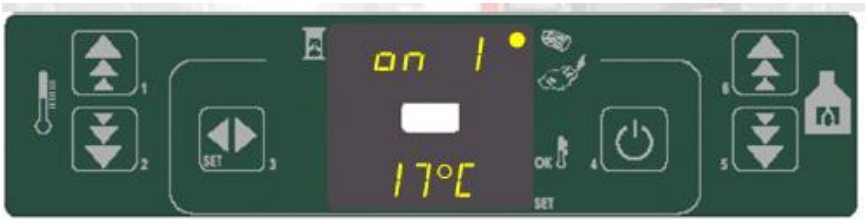

Figure 6.

In this stage the buttons 5 and 6 adjust the stove energy from 1 to 5, provided that the ambient temperature is less than the determined set temperature*.

Otherwise, the heating energy is set to a minimum.

* Actually, the stove is set to an ambient temperature. After reaching the desired temperature (manually adjusted – look at the chapter with description of the modification of ambient temperature), the stove adjusts its operation to a minimum and in that case it is not possible to change the heating energy.

If the pellet fuel does not ignite, the stove will try once more to ignite the fuel. If the pellet ignition does not succeed once again, this will be indicated with an alarm.

The speed of the device for air suction and the fan, as well as the time required for furl ignition through the heating element, are parameters which can be adjusted only by authorized professional repairmen, factory experts.

Once connection to the power supply is established, upon stoppage of electricity for a certain period of time, the control of the electronics enables discharge of the remaining smoke with an increased speed of the air suction device and then the display shows the following message "COOL FIRE". Once the cooling is over, then the fuel ignition starts once again.

IMPORTANT NOTICE

The stove normally switches on after about 15 minutes, with a good quality of the pellet fuel and with an ambient temperature of 11 degrees. If the ambient temperature is lower and the spark plug functions normally, cancellation of the stove ignition may occur. If this happens, you should switch off the stove by pressing the button 4. Than take remove and empty the cast burner where the pellets fall and combust. Return the cast burner to its position in the stove and once again start (restart) the stove by pressing button 4 for few seconds.

• In order to change the set ambient temperature (this is the desired temperature of the room where the stove is located), at any moment press the button 3 and use the buttons 2 and 1 to adjust the temperature indicated on the lower display. When the button 3 is pressed, the lower part of the control board indicates the set ambient temperature (the one you would like to achieve).

• In order to check the stove temperature, press button 1. The lower display on the control board shows the temperature, while the upper display shows the number of rotations of the smoke suction motor.

• Switching off of the stove occurs once you press button 4. The upper display shows the message OFF (switched off) and the flow of pellet fuel into the firebox is stopped. After cooling, the tangential fan switches off (stops working) and after 10 minutes from the moment of cooling, the suction device switches off as well. The switching off speed of the smoke suction device is a parameter which may be set only by an authorized repairman.

NOTE: Even when the stove is cold, switching off of the smoke suction device occurs after about 10 to 15 minutes.

For this reason DO NOT switch off the stove from the main switch (0-1) one the stove is switched off (OFF). Wait until the switching off cycle is finished, that is, after cooling of the stove as it is previously described.

8.3. PARAMETERS USED BY THE STOVE USER

(Press button 3 to access the parameters)

Every time when you press this button you may get one of the following parameters with the corresponding functions given here:

Use buttons 1 and 2 to change the value of the parameters

UT01: day in the week. Day 1 … Day 7 or OFF to show that the programming is switched off

UT02: change the current hours

UT03: change of minutes

UT04: button for access to technical parameters (reserved). DO NOT TOUCH. THE PARAMETERS ARE FACTORY ADJUSTED AND RESERVED FOR EXPERTS AND TECHNICAL STAFF OF THE STOVE MANUFACTURER.

UT05: change of the starting time (program 1) in stages of 10 minutes

UT06: change of the switching off time (program 1) in stages of 10 minutes

UT07: change of program 1, active / inactive, days in the week with the button 2 and going over through the days with button 1. Confirm and proceed with button 3.

UT08: change of the starting time (program 2) in stages of 10 minutes

UT09: change of the switching off time (program 2) in stages of 10 minutes

UT10: change program 2, active / inactive, days in the week with button 2 and going over through the days with button 1. Confirm and leave the parameters with button 3.

UT11: change of the starting time (program 3) in stages of 10 minutes

UT12: change of the switching off time (program 3) in stages of 10 minutes

UT13: change program 3, active / inactive, days in the week with the button 2 and going over through the days with button 1. Confirm and proceed with button 3.

UT14: change of the starting time (program 4) in stages of 10 minutes

UT15: change of the switching off time (program 4) in stages of 10 minutes

UT16: change program 4, active / inactive, days in the week with button 2 and going over through the days with button 1. Confirm and leave the parameters with button 3.

NOTE: In order to go to the next parameter, use the button 3 (adjustment), button 1 for increasing and button 2 for reduction.

NOTE: You can leave the program at any time by pressing button 4.

The stove programming enables that you program the starting and the switching off of the stove four time in one day, seven days in the week (with the day 1 that indicates the day when the first programming has been performed).

Setting the time

You can set the operation of the time and it can be seen on the lower red indicator of the keyboard. When you're programing the operation of the time, it functions also when the stove is not switched on since it is charged by a battery.

You must adjust the time if you want to program the stove operation, that is, if you want to program automatic switching on and switching off of the stove.

The procedure for adjustment of the time is the following:

Press the button 3 twice until the flickering message UT01 appears.

At that moment, press the buttons 1 and 2 to adjust the day in the week (day 1 corresponds to Monday, continuing further to day 7 which corresponds to Sunday). Adjust the day when you make the adjustment of the time (for example, if it is Monday, set DAY1).

Than press the button SET once you set the day. The display shown a flickering message UT02. Now here you can set the time by using the buttons 1 and 2. After you press the button SET one more time (to confirm the inserted time), the flickering message UT03 appears and now you can change the minutes of the time again by using the buttons 1 and 2.

After setting the minutes, press the button SET once again to get the message UT04 which corresponds to the programing of the technical parameters (use only authorized repairmen).

Once you have adjusted and confirmed the operation of the clock, the LED lamp 1 (left, up) on the keyboard will switch on and will stay on. Temporarily recontrol the accuracy of the clock and if it is disrupted you can adjust it once again according to the manner described above.

In order to come out of the program at any time, press once the button for switching off the stove (button 4) in duration of not less than 2 seconds.

Automatic starting and switching off of the stove

If you want automatic starting and switching off of the stove, the clock must be adjusted as described.

Once you've adjusted the clock and reached the parameter UT04, press SET once again to go to UT05. Now here you can select the time of starting for the program of the first automatic starting of the stove, again by using the buttons 1 and 2.

We would like to remind you that the stove starting and switching off can be programmed four times in one day, seven days in the week. The first cycle of starting/switching off takes place though the program 1, with presented parameters UT05, UT06 and UT07. Another cycle of starting/switching off take place through the program 2 and it can be modified through the parameters UT08, UT09 and UT10. The third program is performed with the parameters UT11, UT12, UT13 and the fourth program is performed through the parameters UT14, UT15 and UT16.)

Once you adjust the starting time for the first program, use the button SET to move to parameter UT06, where you can adjust the switching off time of the stove, again by using the buttons 1 and 2.

Once you confirm the selected switching off time by using the button SET, then you go to parameter UT07, where you determine, that is, you set the days in the week when the previously defined program of starting / switching off will be active, that is, when it will act.

Then the message "ON1" appears. This means than on day 1 (previously defined with the parameter UT01) the first program of starting/switching off will be active i.e. it will act at that moment. In order to switch off the automatic starting, switching off of the stove on that day, now press the button 2 and the display will show the message OFF1 (switched off programming for that day).

If instead of that you press the button 1, go to day 2 ("ON2") where in the same manner you can activate or switch off the first starting program with button 2.

Continue in the same manner to activate/deactivate the programs for the remaining days in the week.

After programing the starting/switching off of the stove operation for different days in the week, once again press the button SET in order to get access according to the sequence of parameters UT08, UT09 and UT10, which represent the parameters for adjusting another program for starting/switching off the stove, which can be memorized.

In order to turn off, that is, to delete all weekly and daily programs for starting and switching off of the stove for program 2 (when there is no more flickering of the UT parameter), press the button SET until UT10 appears on the display, than select OFF from the given selection by pressing the buttons 1 or 2 for all 7 days, separately for each day.

If you want to turn off, that is, to delete the programmed starting and switching off of the stove of the program 1, you should press SET to get to UT07, for program 3 to get to UT13, for program 4 to get to UT16 and in the described manner as for program 2 (UT10) cancel all programs for starting and switching off of the stove for all days (everywhere it should be OFF-switched off).

8.4. ALARM MANAGEMENT

An alarm signal (meaning that the stove informs about the occurrence of a certain problem with a sound signal) appears in the following cases:

ORIGIN OF THE ALARM	INDICATION ON THE DISPLAY
Probe for smoke temperature	ALARM SOND FUMI
Probe for smoke temperature	ALARM HOT TEMP
Failed ignition	ALARM ACC NO
Stoppage of stove operation	ALARM NO FIRE
Lack of power supply	ALARM NO RETE
Safety thermostat of the auger (spiral)	ALARM DEP NO
Thermostat for general safety	ALARM DEP NO
Pressure switch	ALARM DEP NO

In case of irregularities of the operation, the following procedure is activated:

1) The system for automatic pellet filling switches off
2) The smoke discharge fan operates with a full maximal capacity for maximum twenty minutes.

Before switching the stove once again, wait that it gets completely cold and then press the button „4"(on/off).

If the stove is not cold, the message „ AttE"is shown as in figure 7.

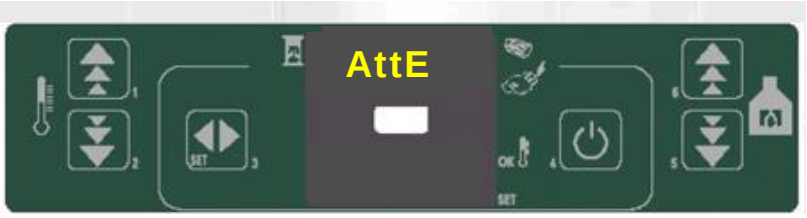

Figure 7.

8.4.1. Alarm dEP no (pressure alarm – alarm of the pressure switch)

It occurs when irregularities occur related to:

The flue pipe hardly pulls which causes poor, insufficient pressure.

If the alarm continues occurring, check whether the stove or the chimney should be serviced.

The smoke pressure switch controls the negative pressure in the stove chamber due to improperly closed door or ash box, or due to some obstacles in the smoke outlet. In this case, the display shows the message ALAr dEP no (Figure 8), the smoke motor functions maximally and then it switches off after 10 minutes.

Figure 8.

8.4.2. Alarm ALAr Sond (alarm of the flue gases probe)

It appears when an error occurs in the smoke detection probe, when the probe is broken or it is not connected.

The stove begins the switching off procedure while the alarm is switched on.

Alarm of the smoke probe: if some malfunction occurs at the smoke probe, the display shows the message "SOND FUMI ALAR", and in this case the fan and the smoke suction device function with full power.

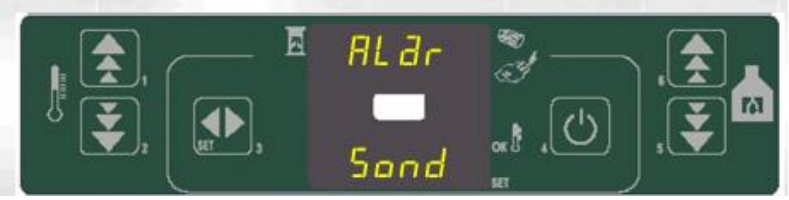

Figure 9.

8.4.3. Alarm ALAr hot (alarm for excessive smoke temperature)

It occurs when the probe for flue gases indicates too high temperature (more than 280ºC)

The stove begins the switching off procedure while the alarm if on.

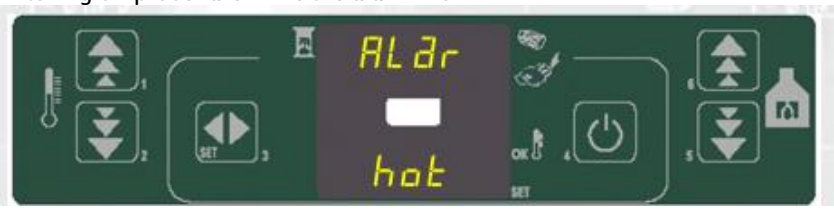

Figure 10.

8.4.4. Alarm of the chamber:

this alarm appears when the temperature of the stove chamber is too high and then the message "HOT TEMP ALAR" appears. In order to prevent the occurrence of this alarm to certain temperature limits, the smoke suction device and the exchanger must function at their maximum, and the fuel pellets are minimally inserted. In order to return to normal operation, press the button 4, for 3 seconds until the boiler returns back to ON (switched on) state.

8.4.5. Alarm (safety thermal) for overheating of the chamber or temperature of the auger

distributor for pellet supply: It occurs if the main safety thermostat from 80°C or 180°C reads a temperature higher than the allowed. The message **„ALAr dEP no"**appears (Figure 11) and the system stops. This alarm appears when the temperature of the chamber or the temperature of the funnel for pellet inlet is too high, and in this case the following message appears " ALAr dEP no ". This is one additional safety mechanical device. In order to return to normal operation, you need to wait for the stove to get' cold (the fans for smoke and for cooling are in function). This cooling lasts about twenty minutes. Than restore the function of the safety thermostat that has blocked the stove operation (by unscrewing the plastic cover and manually press the thermostat button until a silent metal sound is heard) which is located in the lower front part, above the main switch (0-1) (Figure 3.3.3) and then press the button 4 in a duration of 3 seconds until the stove returns back to it ON (switched on) position. The upper thermostat blocks the stove operation when the stove chamber heats at 180°C and the lower one when the case of snail transmission heats at 80°C.

NOTE: If one of these two last alarms is active, make sure that the chamber is not clogged with ash and that the flue is not partially clogged.

Figure 11.

8.4.6. Alarm for failed ignition

It triggers when the ignition stage failed and the following message appears „ALAr Acc no“ (Figure 12). The switching off procedure immediately activates.

Figure 12.

8.4.7. Alarm for power outage

When the stove is switched on, a power outage stops the operation of the electrical devices on the stove. When the power supply returns, an alarm signalization occurs as shown in figure 13:

Figure 13.

8.4.8. Alarm ALAr Fan (alarm for exhaust gases fan)

If the smoke discharge fan does not function well, an alarm occurs – ALAr FAn FaiL (Figure 14).
The stove begins the procedure of switching off while the alarm is on.

Figure 14.

8.4.9. ,,StoP FirE“ (it is not an alarm)

StoP FirE“ mode can be activated in adjusted intervals, during normal operation. Cleaning of the stove is performed.
A message „StoP FirE“ is shown (Figure 15).

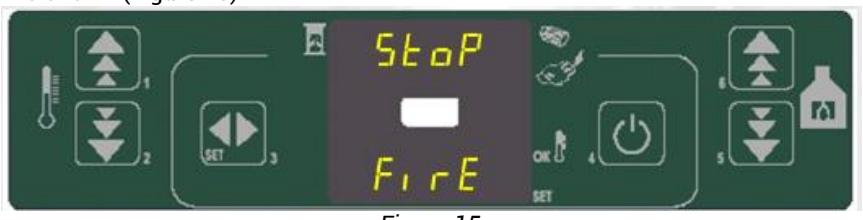

Figure 15.

By pressing the button 4 you can delete, that is, remove a message from the display. The alarm signals are followed by a sound signal.

8.5. Electrical connection scheme

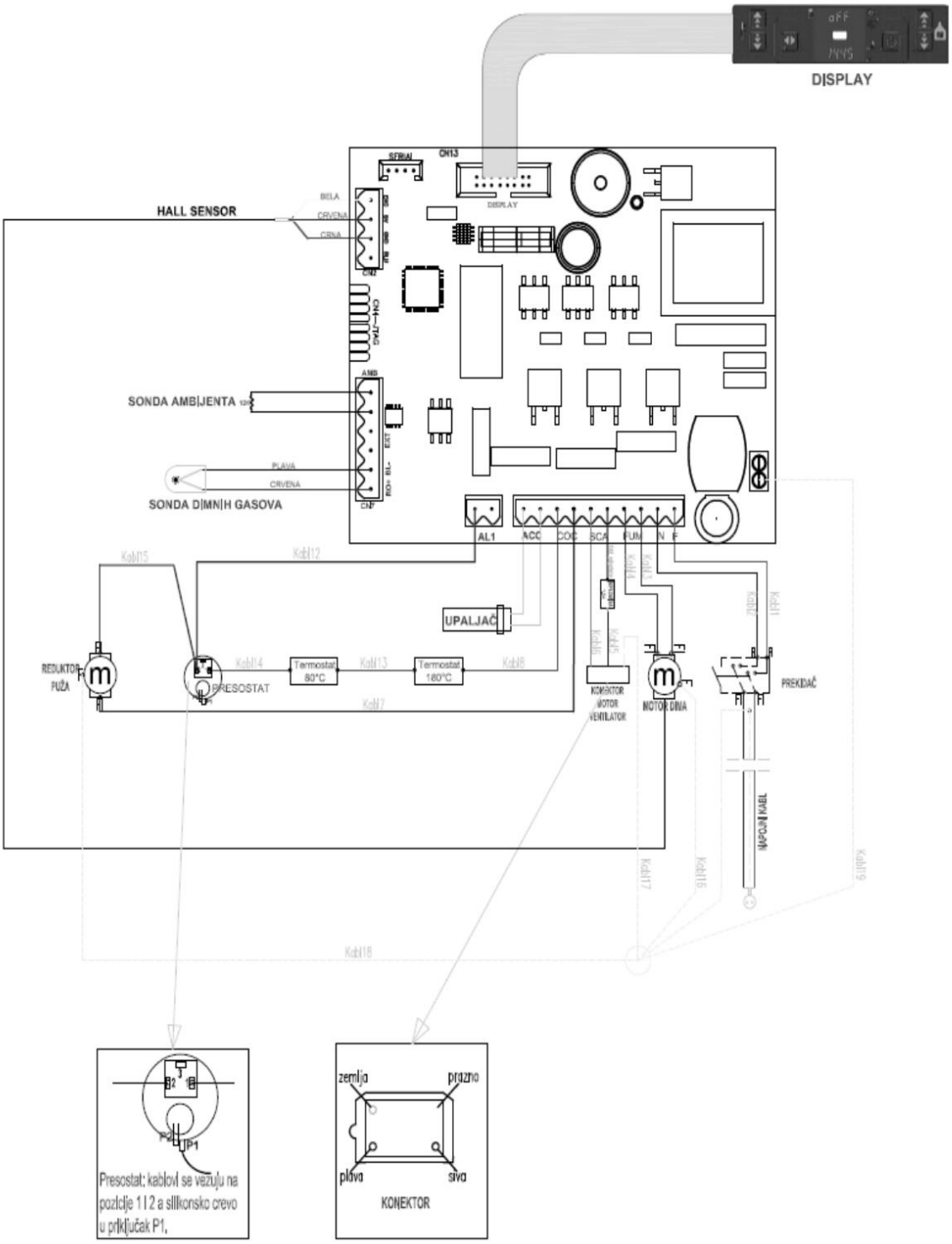

Figure 16.Electrical connection scheme

9. MAINTENANCE AND CLEANING

9.1. SAFETY MEASURES

! Before undertaking any maintenance operation, apply the following safety measures:

A) Make sure all parts of the stove are cold.
B) Make sure the ember is completely extinguished.
C) Use means of personal protection specified by the Directive 89/391/CEE.
D) Make sure the main electrical switch is off.
E) Make sure there can be no power supply. Pull out the plug.
F) Always use the right tool for the maintenance of the stove.
G) When the maintenance or repair operations are completed, and before putting the stove into operation, reset all the protections and activate any protective devices.

9.2. REGULAR MAINTENANCE BY THE USER

9.2.1. Interior cleaning of furnace

The stove requires a simple, but often careful cleaning in order to guarantee efficient performance and proper operation.

! Perform cleaning when the stove is cold.

EVERYDAY CLEANING

Remove the ashes that are deposited inside the furnace (Figure 9.2.1-1)

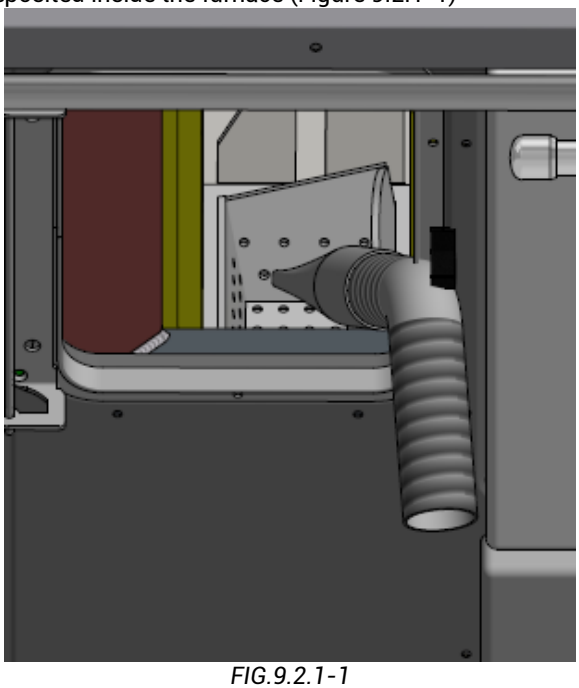

FIG.9.2.1-1

The aim of this cleaning is to enable free flow of the air burning from the holes of the EMBER TRAY. The use of a vacuum cleaner can simplify cleaning ashes. Use the device that has a densely-woven filter to avoid:

- re-release of the sucked ashes into the air;
- breaking the vacuum cleaner due to suction of particles of certain sizes.

PERIODIC CLEANING

Perform complete periodic cleaning of the burner by removing the ember tray. (Figure 9.2.1-2).

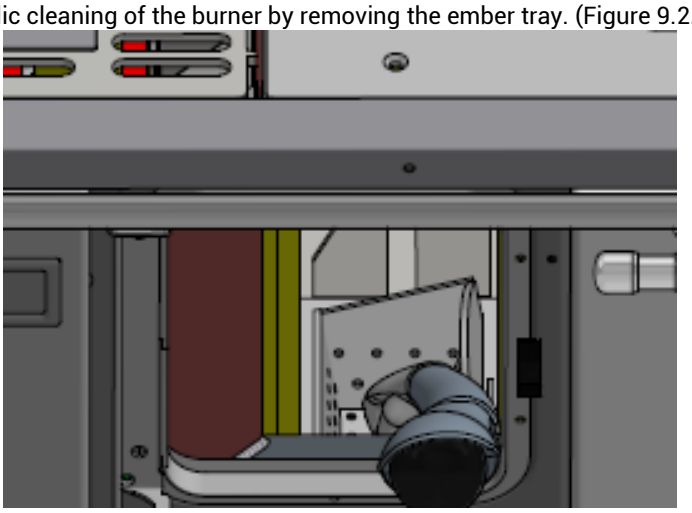

FIG.9.2.1-2

Clean the smoke extractor by removing panels from the baking plate (Figure 9.2.1-3).

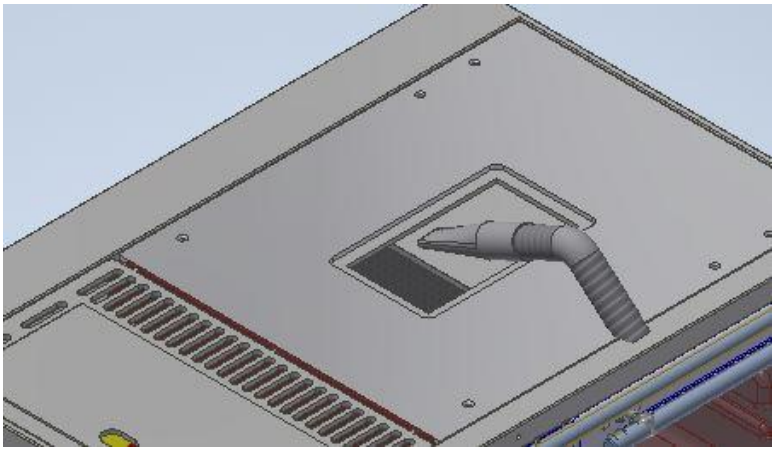

FIG.9.2.1-3

Clean the area for extracting smoke (Figure 9.2.1-4).

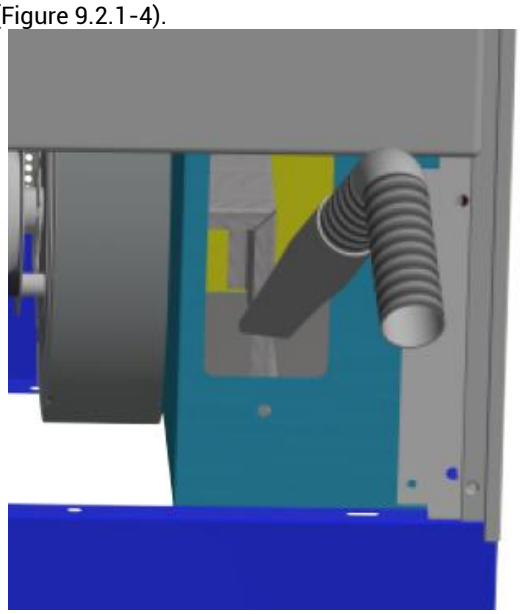

FIG.9.2.1-4

Clean the area where the precipitation remains below the oven (Figure 9.2.1-5).

FIG.9.2.1-5

☞ **The presence of condensation is an indicator of possible infiltration of water or over-cooling of smoke. It is advisable to determine the possible reasons in order to enable the stove to work properly again.**

9.2.2. Cleaning ashtray

Cleaning the ashtray is done once a week or as needed.

To reach the ashtray, open the door in front of the ashtray. Remove the ashtray (Figure 9.2.2.1).

Empty the ashtray.

FIG.9.2.2.1

Vacuum up any remains from the space containing the ashtray.
Put the ashtray back into place and close the door.

9.2.3. Glass cleaning

The glass is cleaned with a damp cloth or wet paper.
Rub until the glass is cleaned.
Detergents for cleaning the kitchen ovens can also be used.
Do not clean the glass while the stove is working and do not use abrasive sponges.
Do not wet the gasket around the door because it can fail.

9.2.4. Chimney cleaning

Cleaning should be done at least twice a year, at the beginning and in the middle of winter period, i.e. whenever necessary.

If there are horizontal components, it is necessary to check and remove possible residue of ash and soot before they shut up the passage of smoke.

If the chimney is not cleaned, the following problems may occur:

- bad combustion;
- glass browning;
- clogging of the ember tray due to deposition of ashes and pellets;
- deposition of ashes and excessive deposition on the exchanger, which leads to poor performance of the stove.

A) Valve against the wind (Figure 9.2.4.1)
B) Access eye (Figure 9.2.4.1)

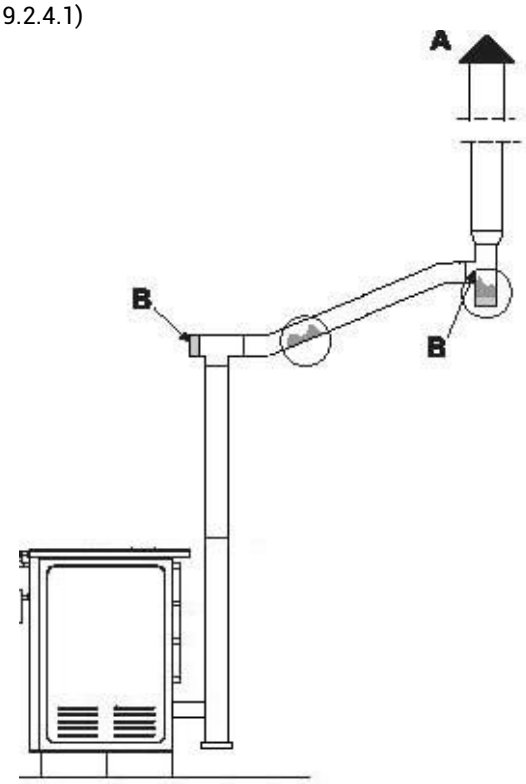

FIG.9.2.4.1

10. INFORMATION ON THE DESTRUCTION AND TRANSPORT TO LANDFILL

Destruction of the stove and its transport to landfill is the exclusive responsibility of the owner who must apply the applicable laws of his country related to safety, respect and preservation of the environment.truction and transport to landfill can be delegated to a third party, but authorized companies should always be contacted for takeover and destruction of the specified material.

☞ **INSTRUCTION** *always comply with applicable regulations of the country where the stove is installed for the destruction of the material and possible destruction reports*

! **ATTENTION** *All the operations of dismantling the stove for its destruction must be performed on the stove that is unplugged.*

- *take out all electrical components;*
- *separate batteries stored on electronic pads;*
- *destroy the stove through an authorized company*

! **ATTENTION** *Leaving the stove on inadequate site presents a great danger to humans and animals. Responsibility for any damage to humans or animals is at the expense of the owner.*

When the destruction of the stove is performed, the CE marking, this manual and other documents in connection with the stove must be destroyed.

11. TECHNICAL SPECIFICATIONS

	Power	
	Reduced	**Nominal**
Global thermal power (effect)	3.8 kW	8 kW
Effeciency	90,7 %	88,8 %
Smoke temperature	92 °C	147 °C
Smoke volume	5.7 g/s	7,7 g/s
Fuel consumption per hour	0.859 kg/h	1.845 kg/h
CO emission (with 13% O_2)	128,8 mg/Nm^3	36 mg/Nm^3
Smoke output	Ø 8 cm	
Air intake pipe	Ø 6 cm	
Net / gross weight	141 / 163 kg	
Fuel	Pellets	
Feed tank capacity	Max ~ 15 kg	
Chimney draft	12(±2) Pa	
Heating area	70 m^2	
Stove intended for the area not smaller than	40 m^2	

REQUIREMENTS ON ELECTRICAL POWER

Voltage	230 V
Frequency	50 Hz
Maximum absorbed power during operation	110 W
Absorbed power on ignition	400 W

SVT correction, 05.10.2026: net 141 kg / gross 163 kg. Source: manufacturer product page.
https://alfaplam.rs/proizvod/alfa-90-pelet-99

12. DIMENSIONS

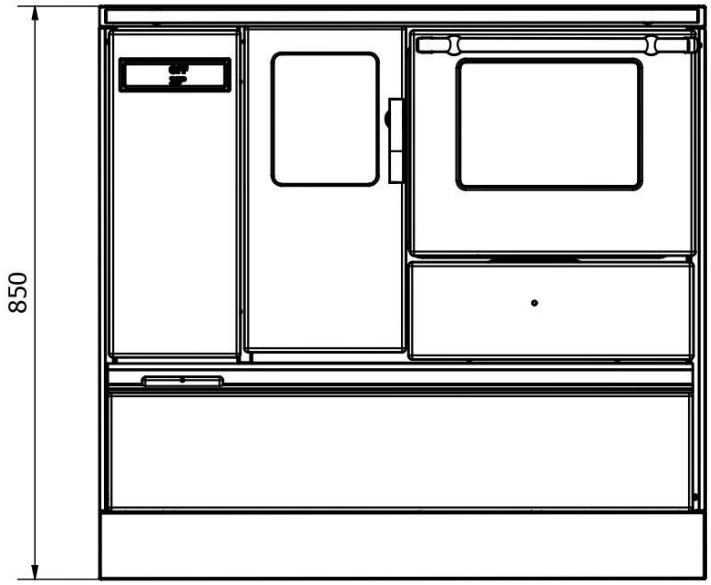

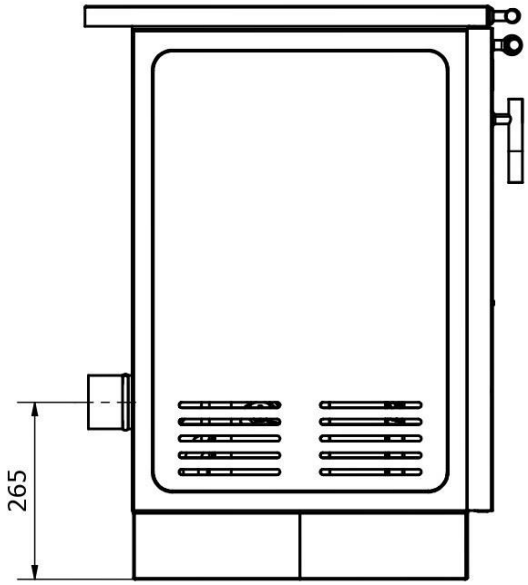

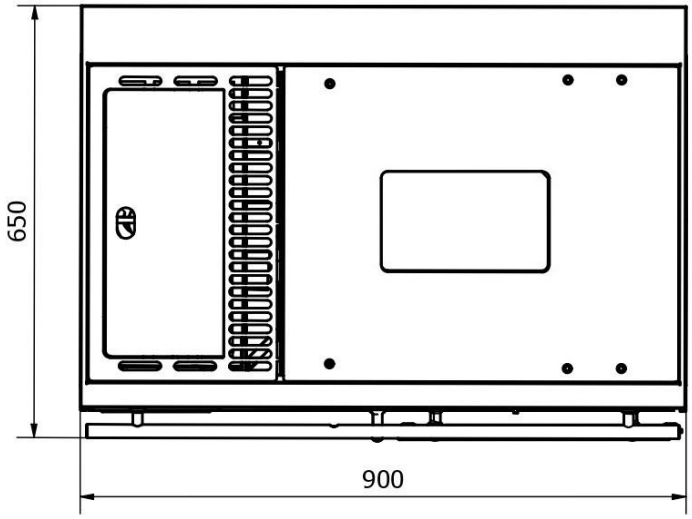

Minimal dimension that is variable depending on setting the pins

Dimensions (mm)

Alfa plam company assumes no responsibility for any errors in this manual and is free to amend the characteristics of its products without prior notification to customers